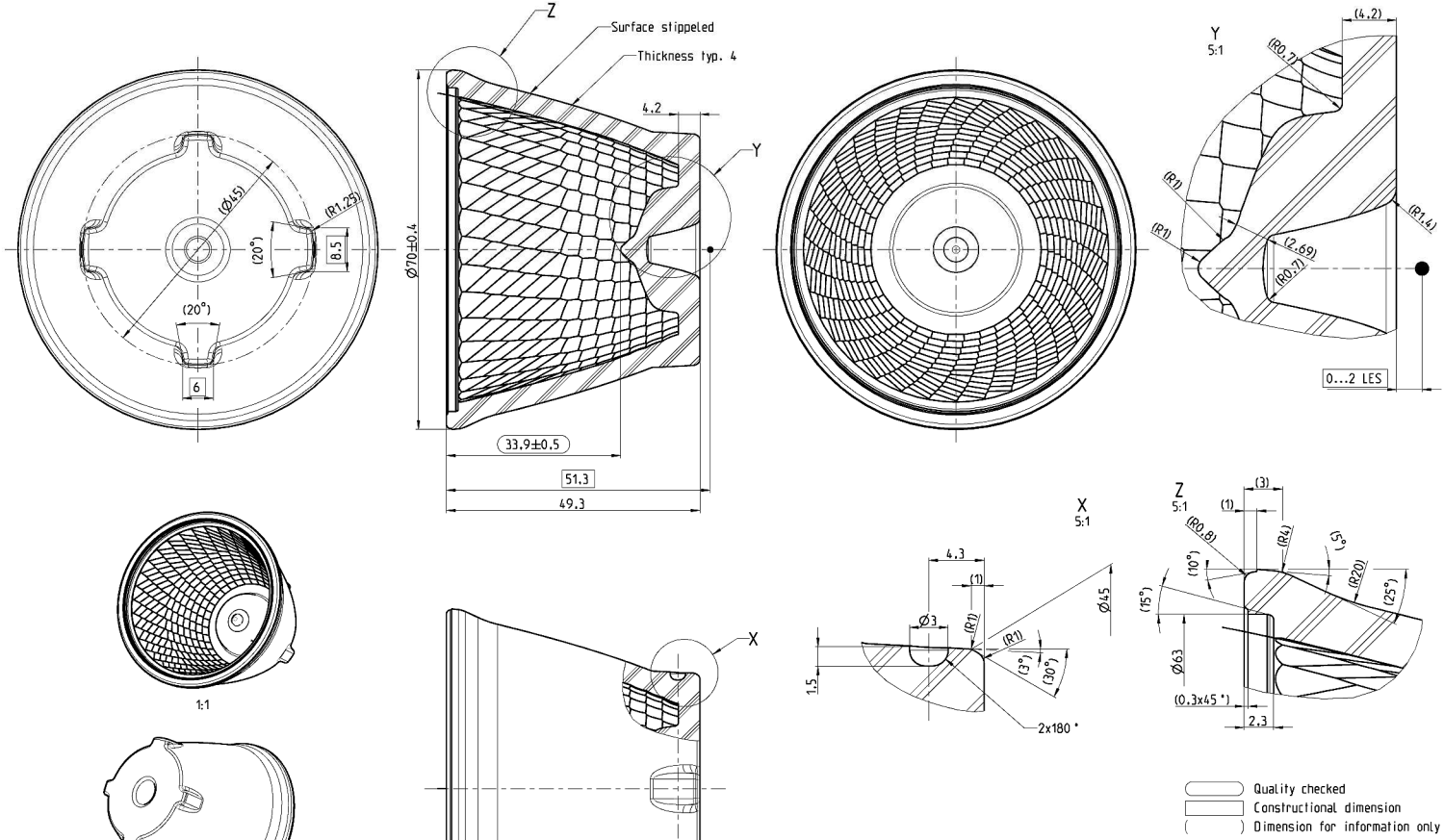

Arbeitspunktlage geändert	27-Jun-16	Günter
Neue Daten LTL / CP: "20151126_Jupiter70_10_....Rev2_4..."	27-Nov-15	J. Aue
Benennung geändert	20-Aug-15	Günter
Erste Muster ohne Einprägung	12-Aug-15	R.Becker
Wanddickenverlauf geändert	31-Jul-15	Günter
Facettierung geändert, Wanddicke im Boden 3 war 3.5; Ø45 war 40; 55.3 war 55.8; Ø3 war Ø2; 1.5 war 1.2	30-Jul-15	Günter
Änderung	Datum	Name

Scale 2:1 (5:1) (1:1)	Material SUPRAX® 8488	92g
	Date	Name
Formed	29-Jul-15	Günter
Checked	27-Nov-15	

Tolerances unless otherwise specified are ±1%, but minimum ± 0.5 mm

Reflector Lens Jupiter 70 10°-narrow

Final part number (SAP): 150 1192

Drawing number: 71370_000_006_323 | Version: 06 | Project: 71370

Auer Standard | A2

auer LIGHTING
Auer Lighting GmbH
Hildesheimerstrasse 35
D-37581 Bad Gandersheim
Tel.: +049 (0)5382 / 701-0
www.auer-lighting.com

This drawing is our property. Multigraphing and sending copies to third parties is punishable, bound to claim for damages and prosecution. (Copyright law, law against unfair competition, 8GB). All rights reserved for patent application (17 PG) or registered design (15 DMG).